Futsal Goal

Model: 8300

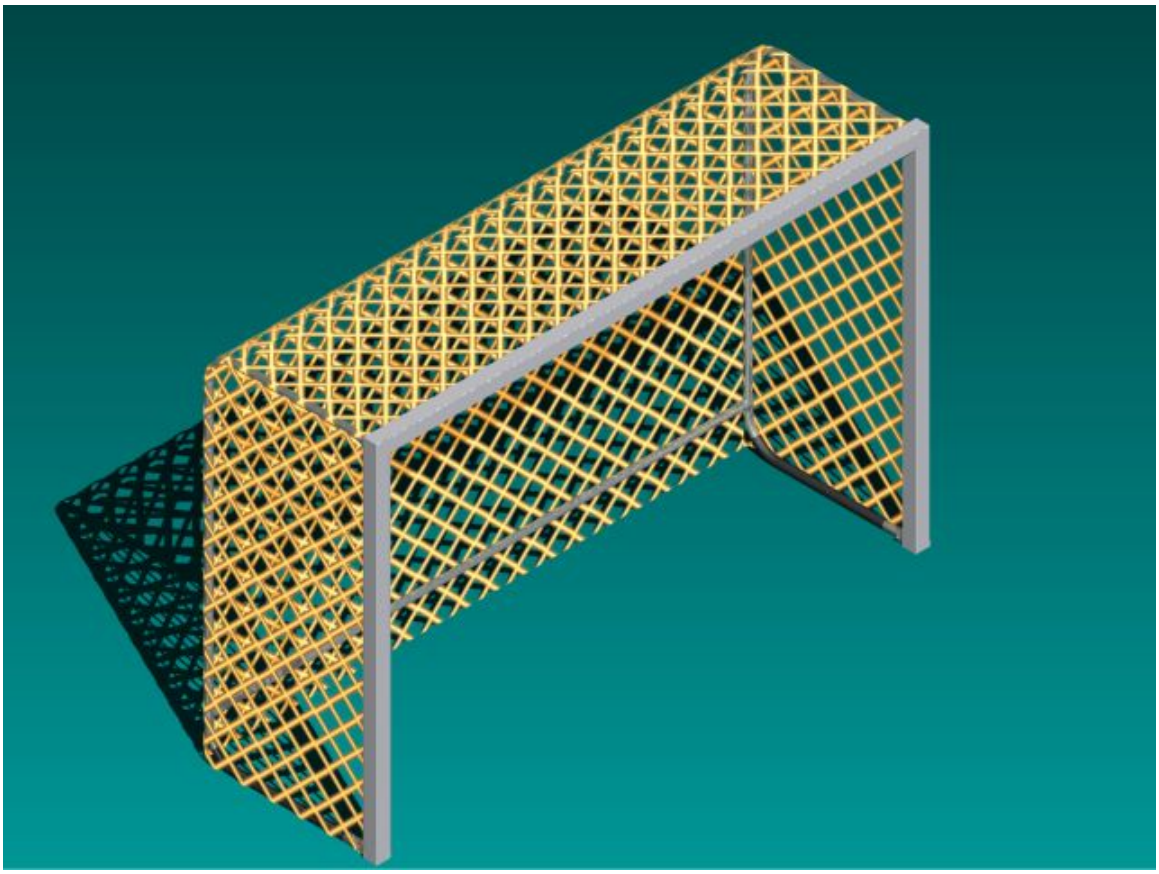

Installation, Operation and Maintenance Instructions

Please read all instructions before attempting installation or operation of these units

---

SAVE THESE INSTRUCTIONS FOR FUTURE USE

PUBLICATION NO.
6 5 1 7 5 5 5 1 6

Revised
October 27, 2009

Table of Contents

Section	Page No.
Introduction/Liability Disclaimer	1
Cautions and Warnings	2
Parts Checklist	3
Goal Assembly	4-9
Maintenance	10

Introduction/Liability Disclaimers

Thank you for your purchase of the Futsal Goal. To ensure that our equipment will provide years of use to you, we are including this installation, operation, and maintenance guide. This guide will provide information on the proper assembly and installation methods, operating procedures, and preventative maintenance of your soccer goal.

Please note that a Bill of Materials is being included with this guide. Please check that all of the parts called out on the Bill of Materials are present prior to beginning assembly. Please do not substitute for factory parts. Please contact the PSS or Gared Sports customer service department and allow them to determine if substitute parts are acceptable.

It is recommended that an individual who has been properly trained perform assembly and set up of the Soccer Goal. No one under the age of 18 should attempt assembly or set up of the unit, unless properly supervised.

To prevent normal wear and tear from shortening the life of the unit, preventative maintenance inspections and repairs should be performed at least once per year. If the units are subject to high or unusual usage, inspections should be scheduled to occur more frequently. If items are found to be nonconforming, replacements can be ordered from PSS or Gared Sports or one of our authorized dealers. When contacting PSS or Gared Sports, please have information regarding the dealer/installer who sold the unit, the name of the project, and any applicable warranty information.

CONSUMER PRODUCT SAFETY ALERT

From the U.S. Consumer Product Safety Commission, Washington, D.C.

Portable/Movable Soccer Goals can fall over causing serious injury or death. Securely anchor or counter weight portable goals at ALL times. Check ALL connecting hardware before EVERY use. When goals are not in use: tip goal on face, chain to nearby fence or store in secure area.

Once the goal is in position for play, place 4 anchor bags (Sand Bags with Sand) on the rear backstay crossbar to counterweight the goal from tipping. **Each sand bag MUST weigh a minimum of 40 pounds.**

If desired, goals may be anchord directly to the floor by drilling a ½" hole through the lower backstay tube and bolting the backstay to the floor using a minimum ½" diameter bolt.

NEVER allow anyone to climb on nets or goal frames. DO NOT allow anyone to hang from the goal frame.

Remove nets when goals are not in use.

Goals should never be used on slopes. Place on level floor or ground ONLY.

SECURELY anchor moveable soccer goal at all times.

Before proceeding with assembly, read all instructions and assembly procedures. Make sure all parts have been received and are not damaged.

Parts Checklist

Verify all parts listed on packing list are present prior to installation.

Futsal goal frame components

Check the chart for the proper parts that match the Goal P/N received.

NOTE: Quantities shown are for 1 pair of Futsal goals. If only one goal was ordered, divide quantities shown by 2. (Only one method of anchoring goal will be used, items 21 thru 26)

Item	Description	Qty	Part Number
1	Net	1 Pair	SGFSNET
2	Backstay with Protective Tube	4	656275499
3	Backstay Crossbar Brace	2	656275496
4	Top Rail	2	656275335
5	Side Post	2	656275330
6	Connecting Tube	4	656275337
7	Backstay Mtg Brkt	8	651653682
8	Brace Clamp (pair)	4	651653590
9	Carriage Bolt, 5/16x2.5	4	501-5-18-40
10	Vinyl End Cap	4	656275497
11	Hex Bolt, 3/8x1.50	16	502-6-16-24
12	Hex Bolt, 3/8x0.75	16	502-6-16-12Z
13	Hex Bolt, 3/8x2.50	8	502-6-16-40
14	Net Clips	48	651652567
15	Flat Washer, 3/8	16	561-6
16	Lock Washer, 3/8	32	562-6
17	Flat Washer, 5/16	4	561-5
18	Square Nut, 3/8	16	546-6-16
19	Lock Nut, 3/8	8	545-6-16Z
20	Lock Nut, 5/16	4	545-5-18Z
21	Sand Bags	8	9-60-SAND
22	BX Type Floor Anchor Kit	1	8340B
23	B Type Floor Anchor Kit		8340BX
24	C Type Floor Anchor Kit		8340C

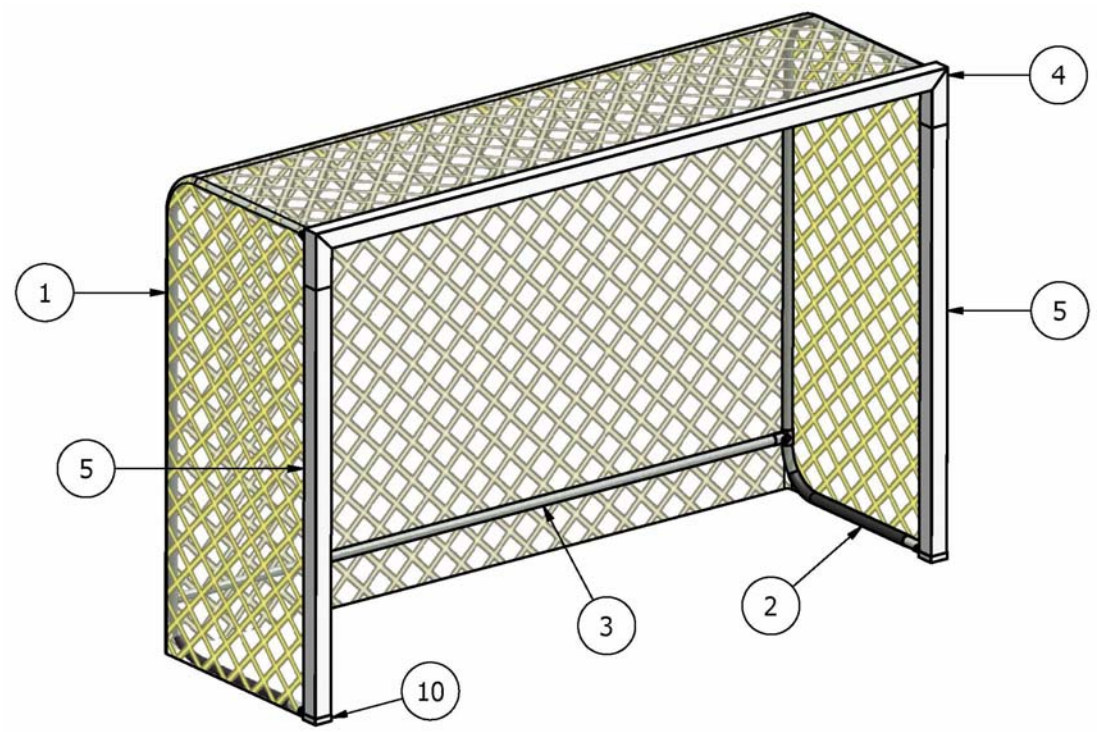

(Master Assembly Illustration)

Goal Frame Assembly

1) Begin by assembling the backstay mounting brackets (item 7) to both ends of the top rail (item 4). Install the brackets about 1” down from the top of the rail using 3/8” x 3/4” bolts (item 12), with 3/8” lock washers (item 16), and 3/8” square nuts (item 18). Insert the square nuts upward in the extruded slot as shown in the illustration below. Position of the bracket will be finalized later when the backstay is added. Bolts can be hand tight for now.

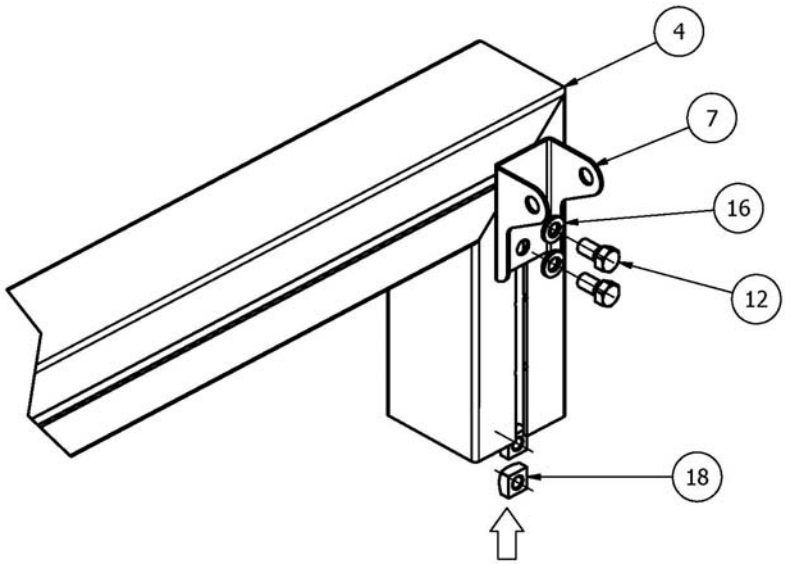

2) Next attach the side posts (item 5). First slide the connecting tubes up into place (item 6). Align the holes and secure using 3/8” flat washers (item 15), 3/8” lock washers (item 16), and 3/8” x 1-1/2” long bolts (item 11). Next slide on the side rails (item 5) and secure with the same hardware. Firmly tighten all bolts.

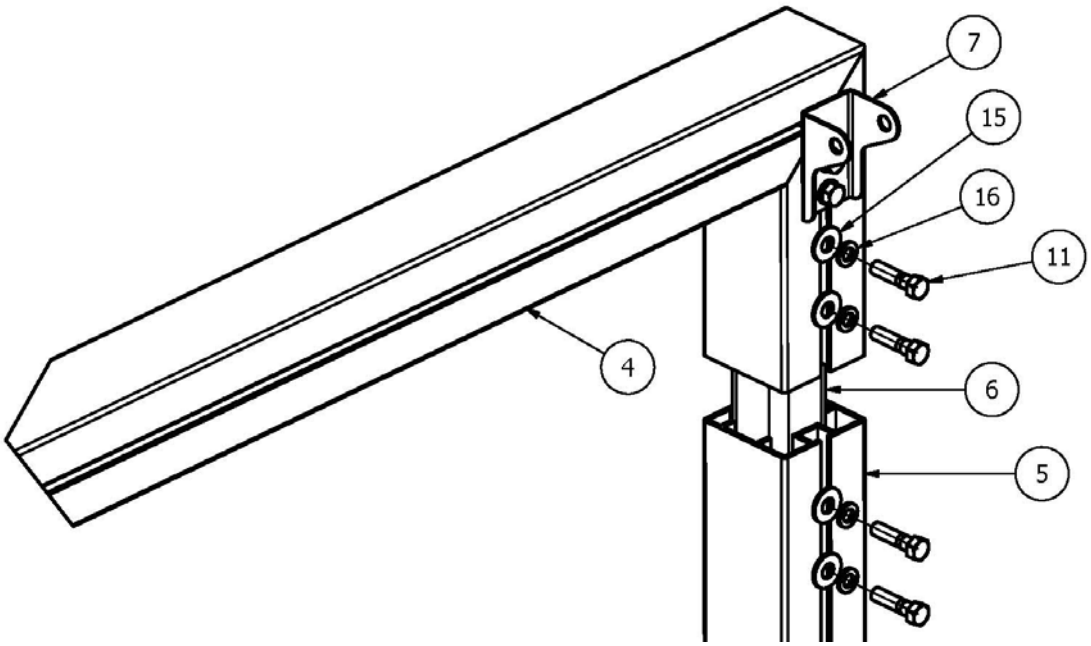

3) Now attach the bottom backstay mounting brackets (item 7) as shown in the illustration below. Use the same hardware as the top brackets. Insert the square nuts into the channel first. Next place the vinyl endcap. Then attach the bracket. It should be placed so the bottom of the backstay (item 2) is even with the bottom of the endcap (item 10) so that all parts sit flat on the floor or ground. Use 3/8” x 2-1/2” long bolts (item 13) and 3/8” lock nuts (item 19) to attach the bottom end of the backstay. When parts are aligned, tighten all bolts.
NOTE: The plastic protective tube portion of the back stay is to be installed at the bottom of the goal. This tubing protects floors from damage due to scratching, etc.

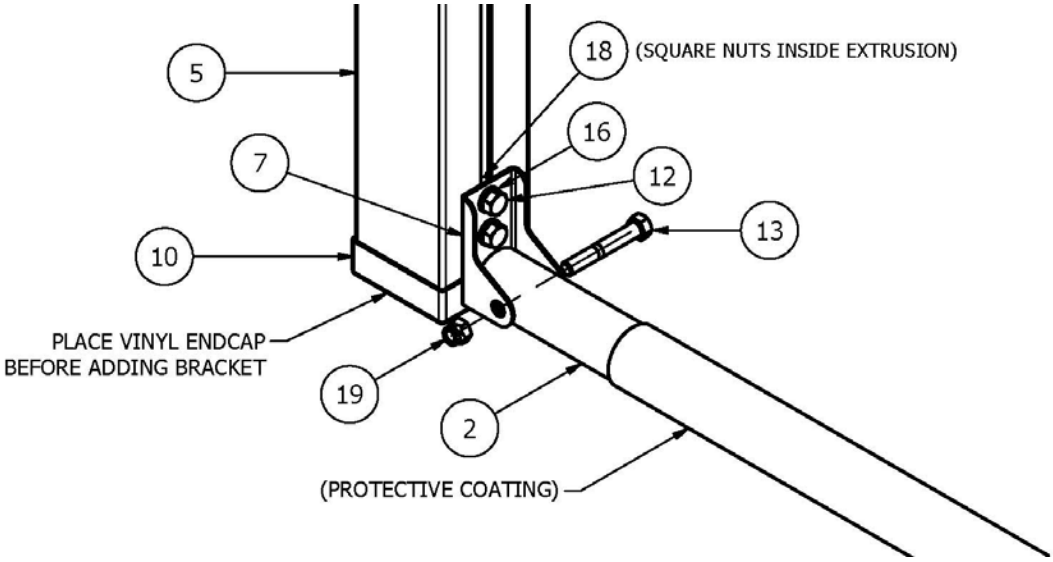

4) Attach the top end of the backstay pipe to the top bracket as shown in the illustration below. Use the same hardware as previously described. Adjust the height of the backstay bracket if needed. When parts are properly positioned, tighten all bolts.

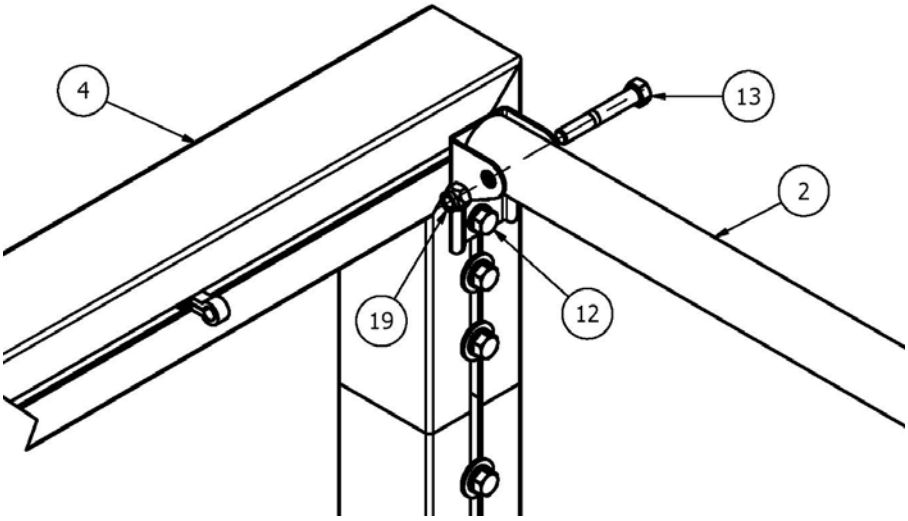

5) Attach the cross brace pipe (item 3) at the back of the two side backstay pipes. (see the following illustration). Use two brace clamp halves (item 8) to attach each end of the cross pipe. The clamps should be positioned just above the bend of the pipe. Insert a 5/16” x 2-1/2” long carriage bolt (item 9) from the backside as shown. Secure with a 5/16” flat washer (item 17) and a 5/16” nylon lock nut (item 20). Tighten nut securely.

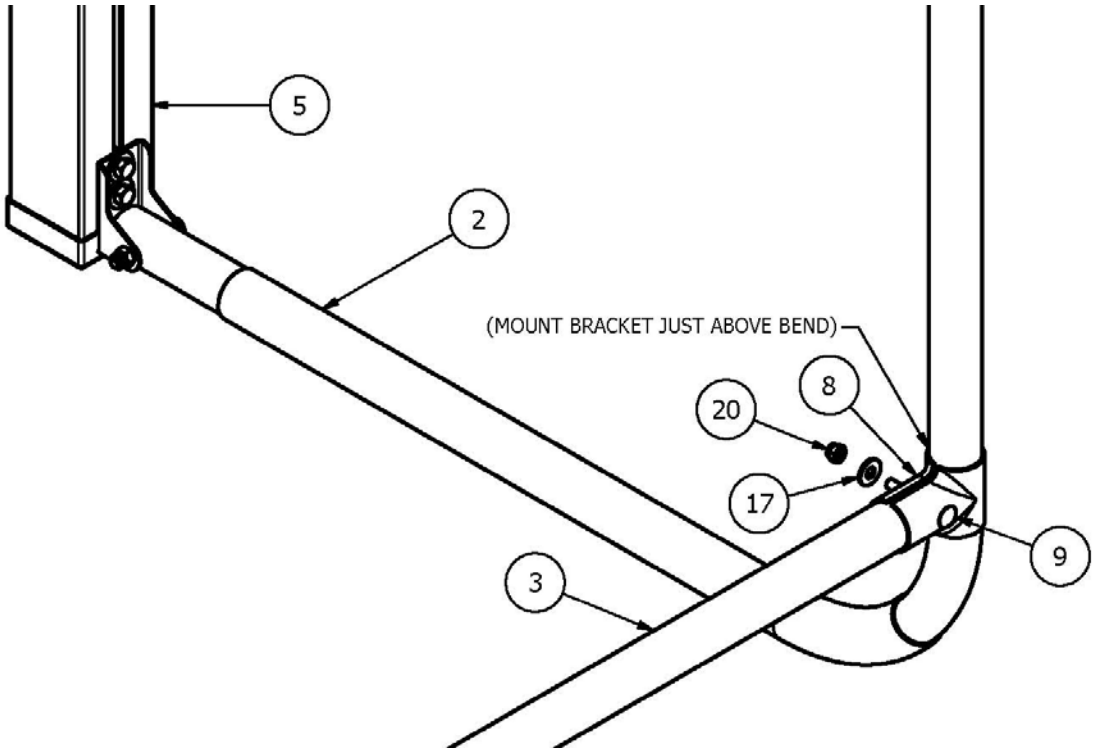

6) Position goal in the upright playing position. Check all connections and make sure the goal is stable. When the goal is properly positioned on the playing field, secure it to the ground with four bags filled with sand (item 21) as shown in the following illustration.

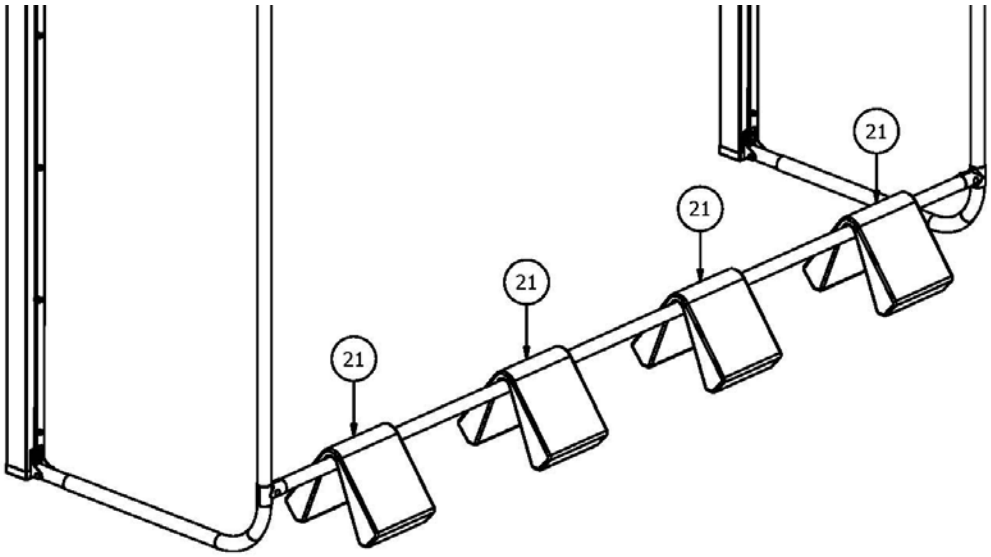

7) The following illustration shows the components needed for indoor floor installations using the BX, B, or C, type anchor systems. (See items 22, 23, and 24 on the Parts Checklist). Follow the installation instructions provided when placing new floor anchors. Placement of the anchors should be toward the rear of the goal as shown below. Sand bags are not needed with these floor anchors.

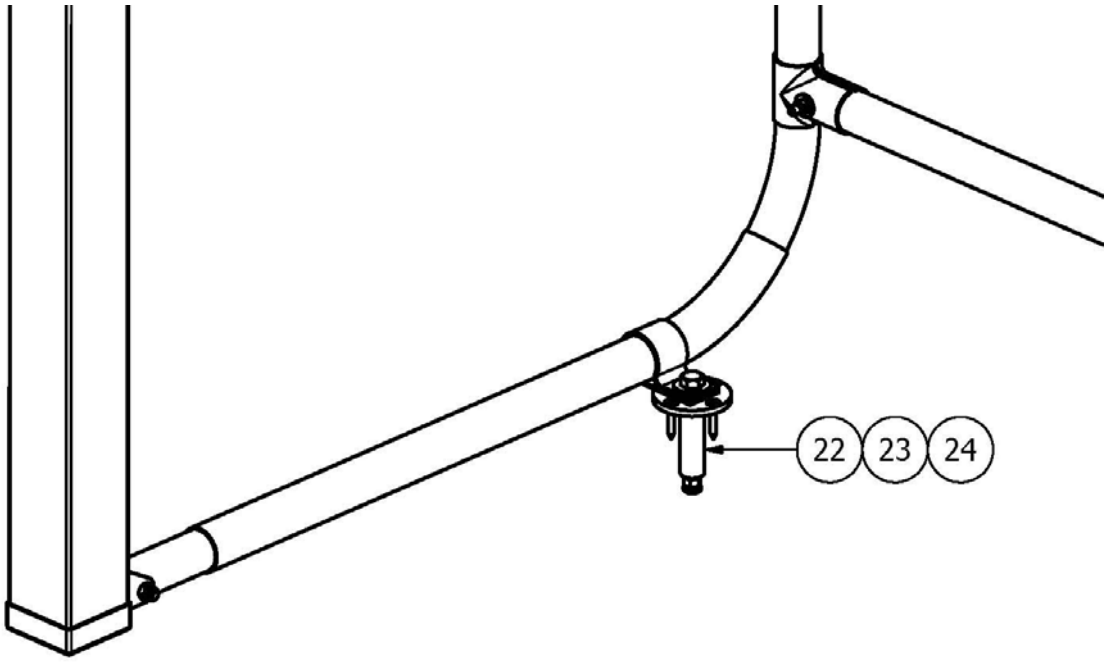

8) Install net using plastic clips (item 14). Insert the clips over the edge of the net as shown. Rotate the clip 90 degrees and insert it into the channel. When fully inserted, rotate it back 90 degrees to lock it into the channel. (See the illustration below) Use (10) clips along the top rail and (7) clips on each of the vertical side posts.

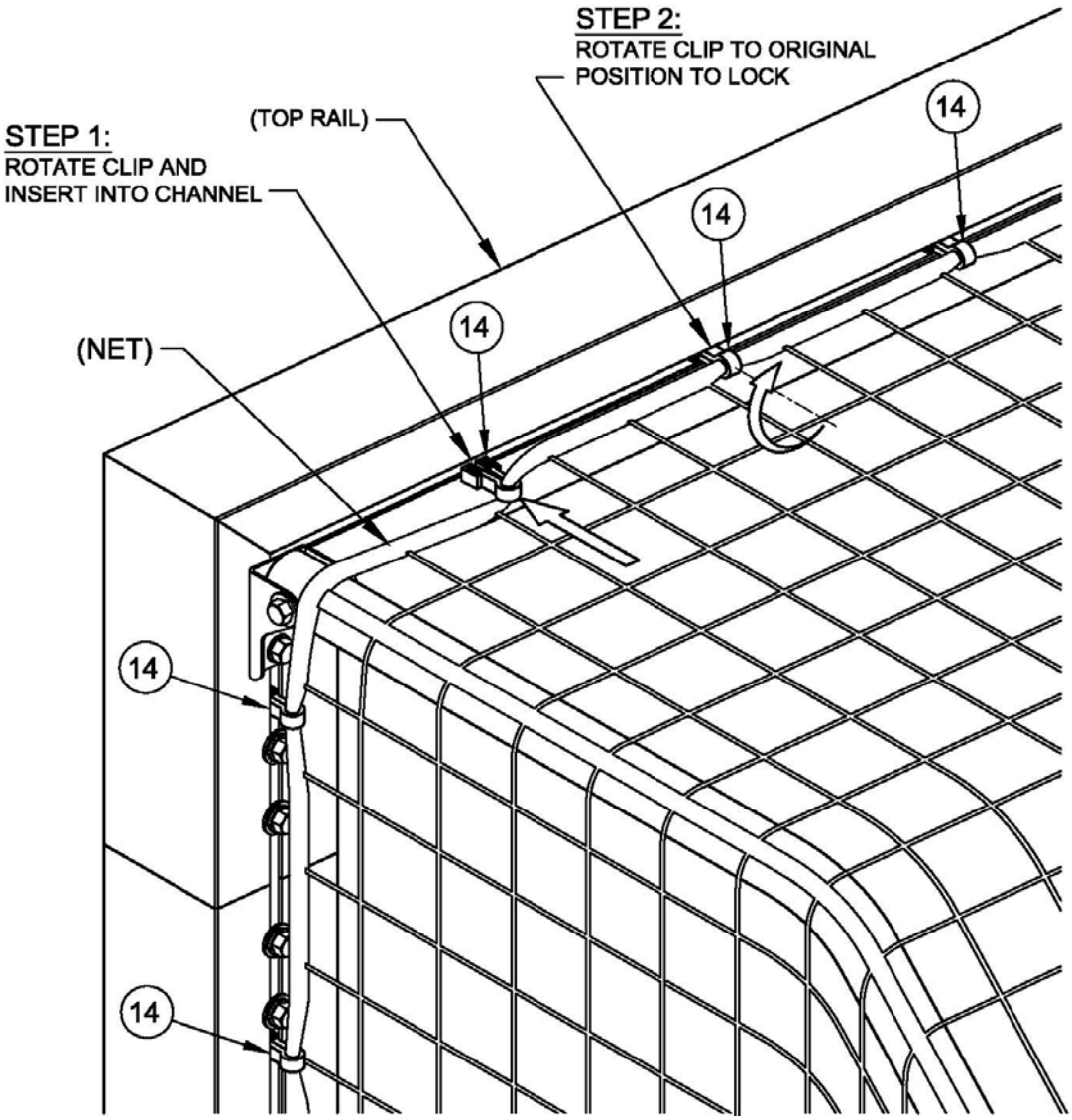

9) Inspect all joints and connections to make sure the goal is ready for play.

Maintenance

1) General inspection of equipment when used should be performed to ensure no catastrophic failures have occurred during the course of use between yearly inspections.
2) It is recommended that yearly inspections be conducted to determine if any bolts or other hardware has become worn or loosened.
3) During yearly inspections, check all joints to make sure they are tight and secure. Check the net for wear, holes, torn rope, etc.
4) Any loose bolts or nuts should be tightened.
5) Replace any components that are missing or worn.

Gared Holdings, LLC

Performance Sports Systems
9200 E. 146th Street
Noblesville, IN 46060

800-848-8034
www.perfsports.com

Gared Sports
707 North 2nd Street
St. Louis, MO 63102

800-325-2682
www.garedsports.com